HAKA **89/45Wh, 89/45Wh+**

Technical data
Version **07/2015**

OPERATION WHEN DIRECTLY CONNECTED TO CHIMNEY	HAKA 89/45 Wh	HAKA 89/45 Wh+
Tested according to	EN 13229	EN 13229
Nominal heat power / Power absorbed to water	14 / 10,2 kW	22 / 15,1 kW
Efficiency	> 80 %	> 80 %
Consumption of wood	3,7 kg/h	6 kg/h
Mass flow of flue gas	10,6 g/s	17 g/s
Average flue gas temperature		
on the output	214 °C	240 °C
Heat distribution		
fireplace insert	9 %	13 %
door glass (single / double)	- / 19 %	- / 19 %
water	72 %	68 %
Required chimney pressure	12 Pa	12 Pa
Required amount of combustion air	40 m^3/h	60 m^3/h
Minimum supply air grating cross-section	300 cm^2	500 cm^2
Minimum outgoing air grating cross-section	350 cm^2	600 cm^2

WATER EXCHANGER SPECIFICATIONS		
Maximum working pressure	2,5 bar	2,5 bar
Minimum return water termperature	55 °C	55 °C
Water capacity	56 liter	56 liter
Connection input / output	G 1 / G 1	G 1 / G 1

GENERAL TECHNICAL INFORMATION		
Combustion air connection	∅ 125 mm	∅ 150 mm
Total weight / lining weight	ca. 435 / 120 kg	ca. 435 / 120 kg
Use in non-ventilated accumulation builds according to craft rules	suitable	
Meets values	BImSchV (Stufe2), 15a BVG	

Hoxter gmbh I Hersbrucker Straße 23 I 912 44 Reichenschwand I Germany I info@hoxter.de I +49 (0)9151 8659 163
Hoxter a.s. I Mlynska 326/13 I 602 00 Brno I Czech Republic I info@hoxter.eu I +420 518 777 701

NR.	THREAD SIZE	DESCRIPTION
1	G 1” (AG)	Water supply from heating system - min. 55°C
2	G 1” (AG)	Hot water supply to heating system
3	G 1/2” (AG)	Water supply from the waterlines into the cooling loop
4	G 1/2” (AG)	Discharge of water from the cooling loop into the waste
5	G 3/8” (IG)	Pocket for air vent valve
6	G 1/2” (IG)	Pocket for thermal sensors
7	G 1/2” (IG)	Discharge valve

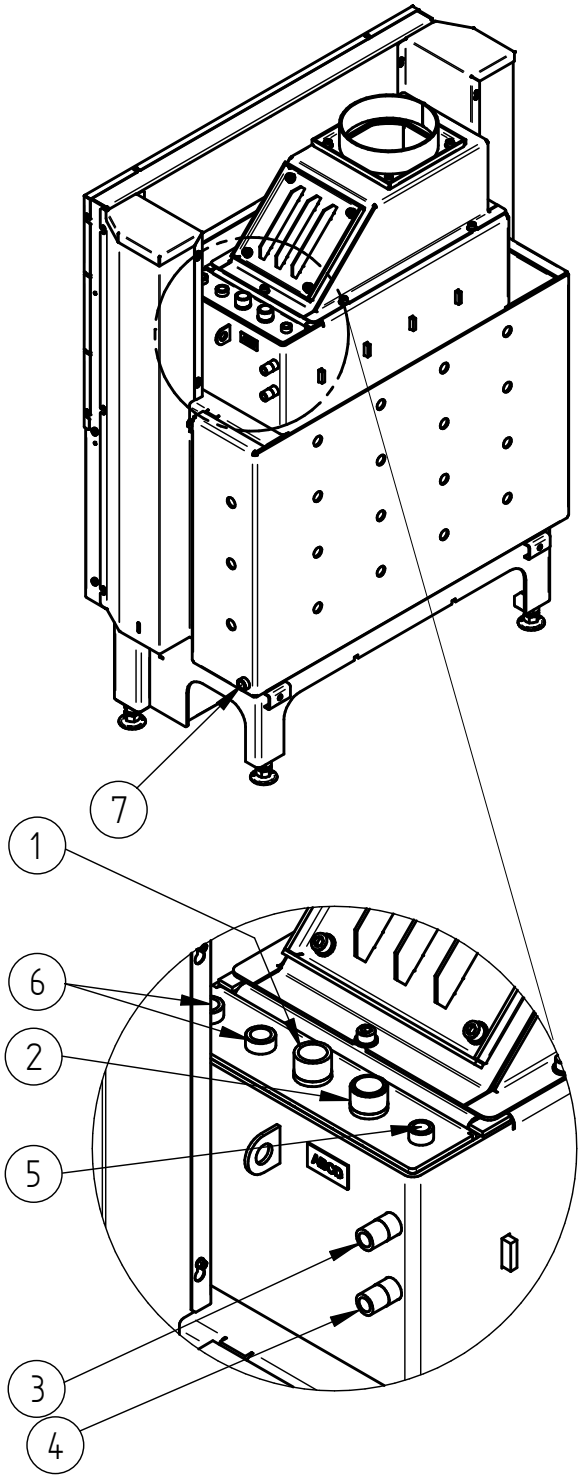

HAKA **89/45Wh, 89/45Wh+**

Technical data
Version **07/2015**

M 1 : 10

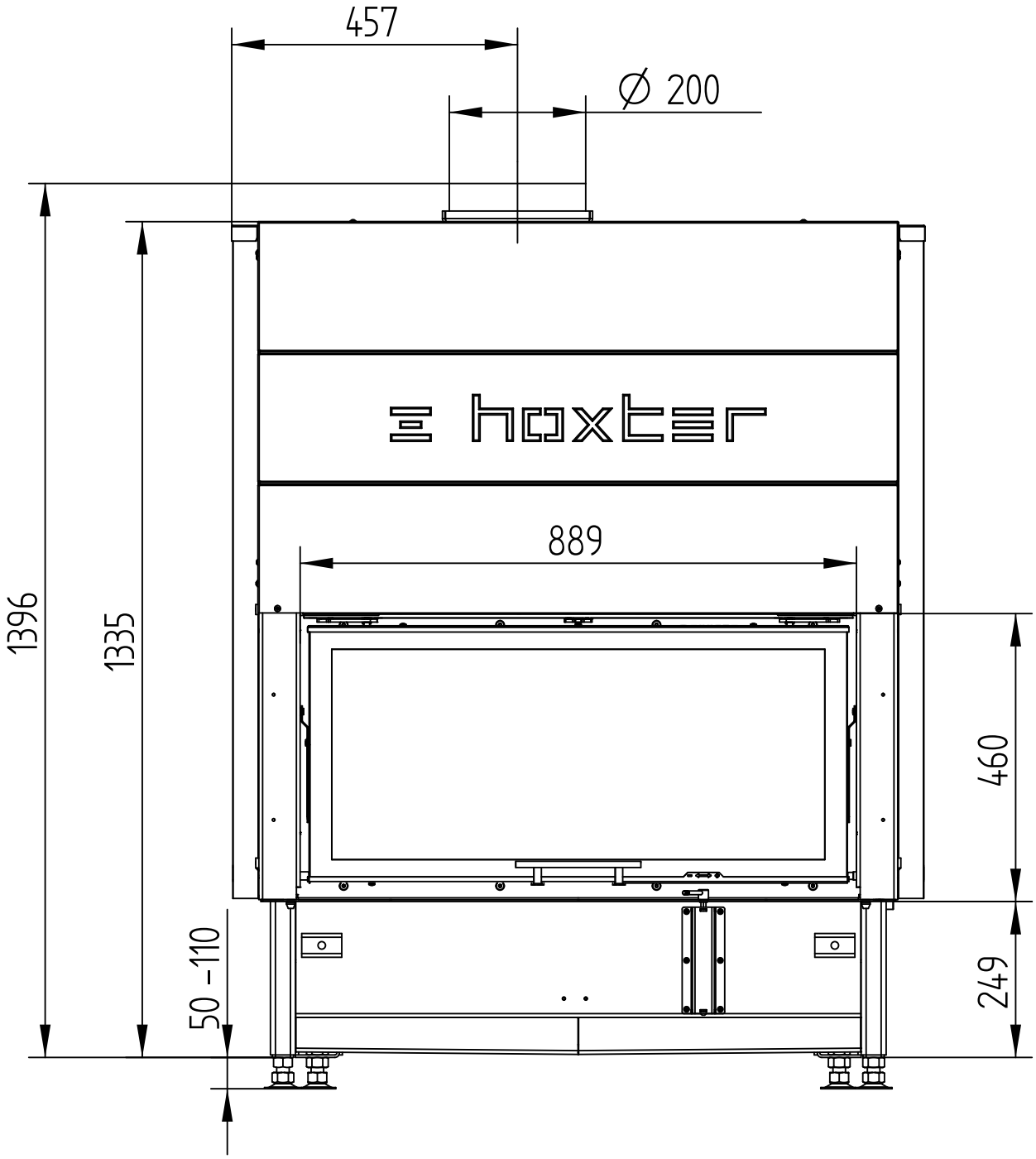

M 1 : 10

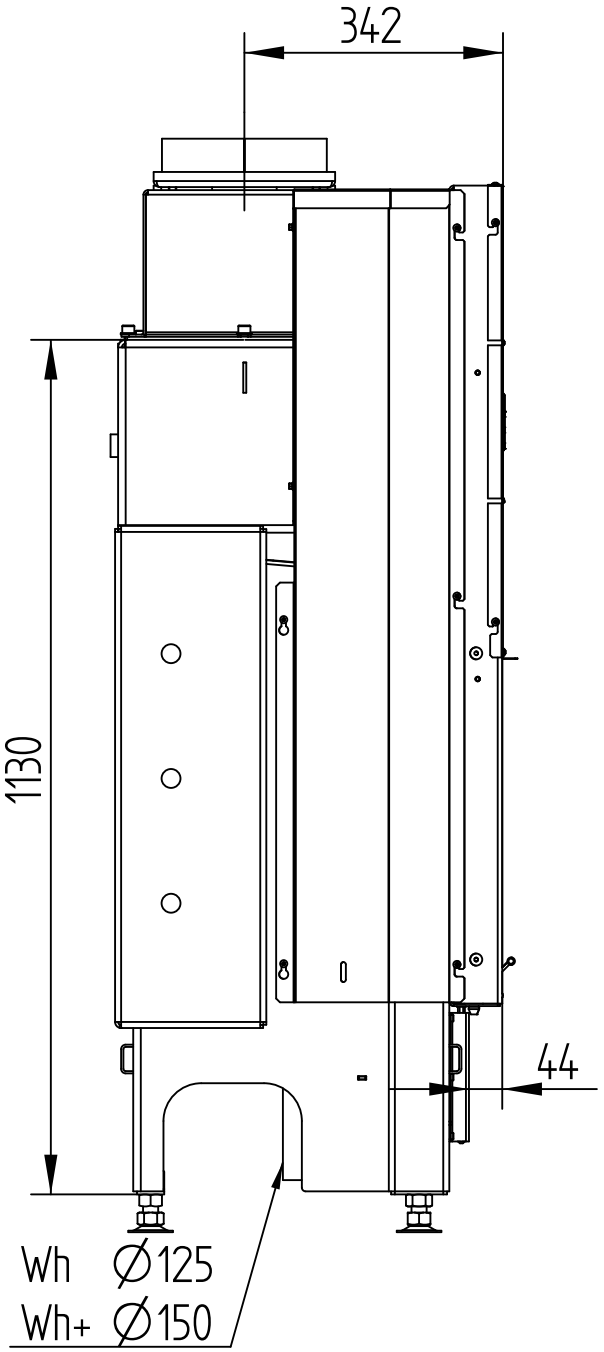

HAKA **89/45Wh, 89/45Wh+**

Technical data
Version **07/2015**

M 1 : 10

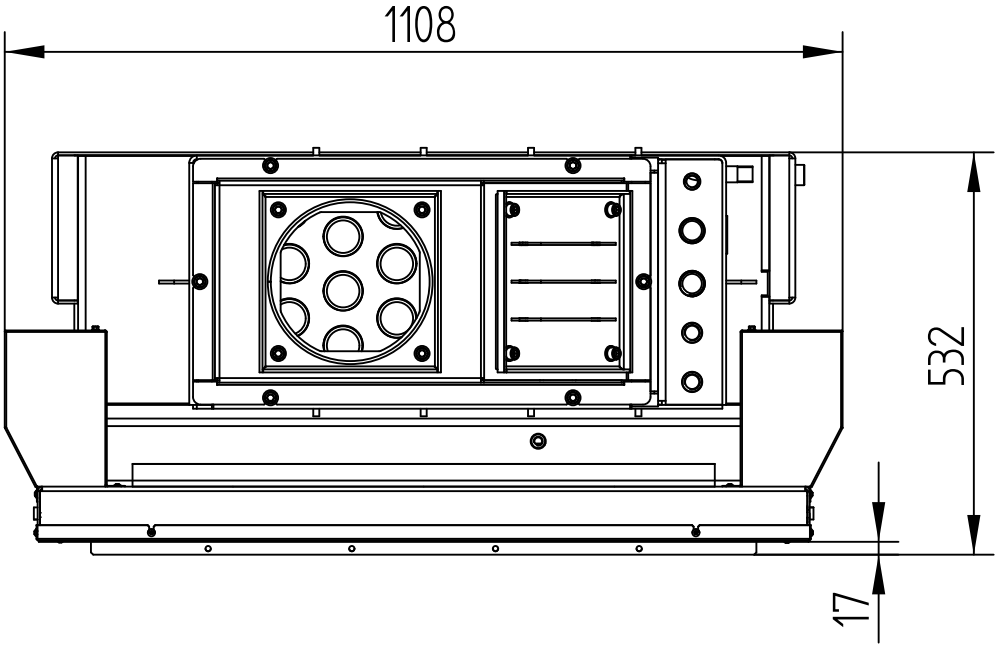

HAKA **89/45Wh, 89/45Wh+**

Technical data
Version **07/2015**

COVER FRAME 4-SIDED 1 x 90°, 50 mm

M 1 : 10

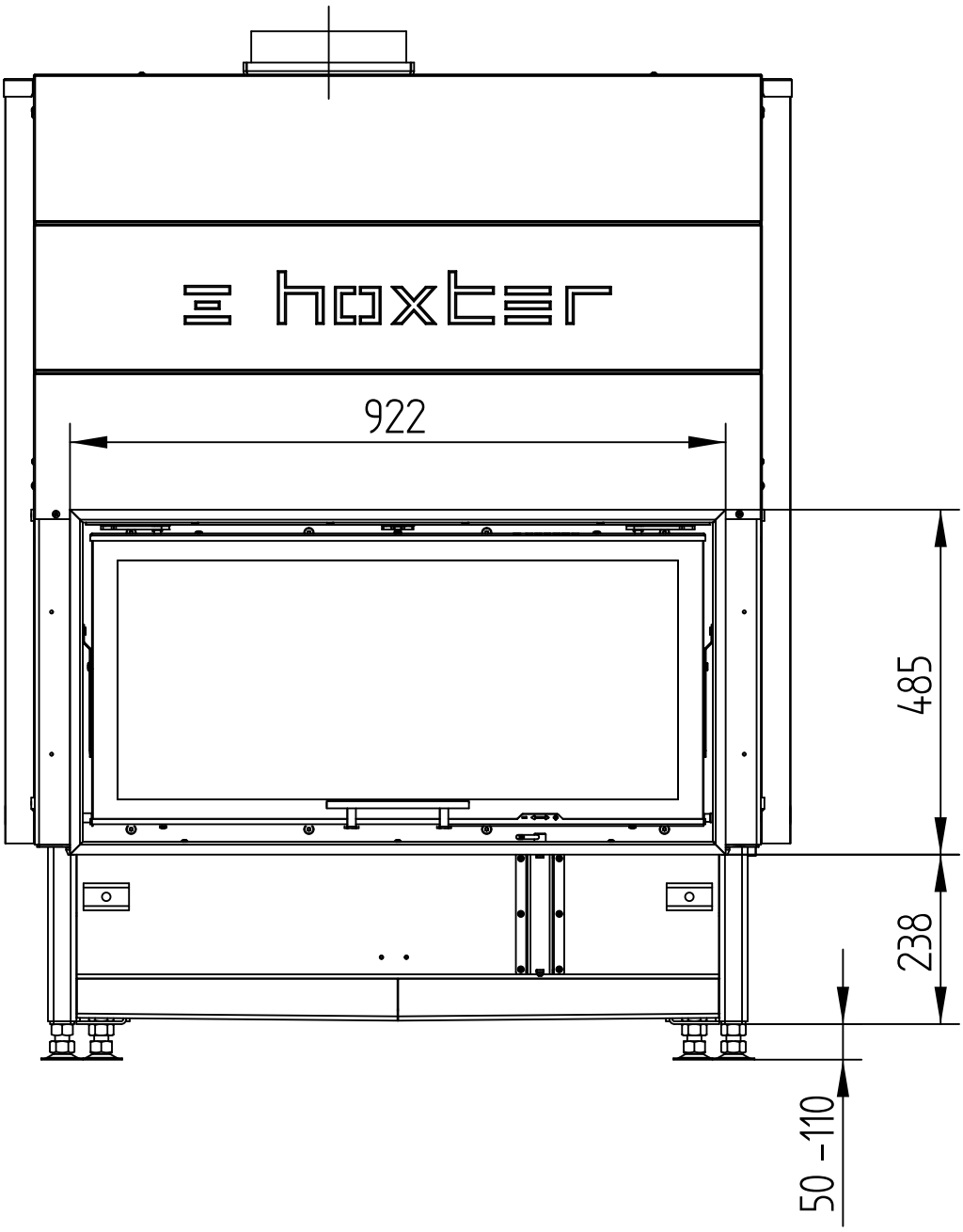

HAKA **89/45Wh, 89/45Wh+**

Technical data
Version **07/2015**

COVER FRAME 4-SIDED 1 x 90°, 50 mm

M 1 : 10

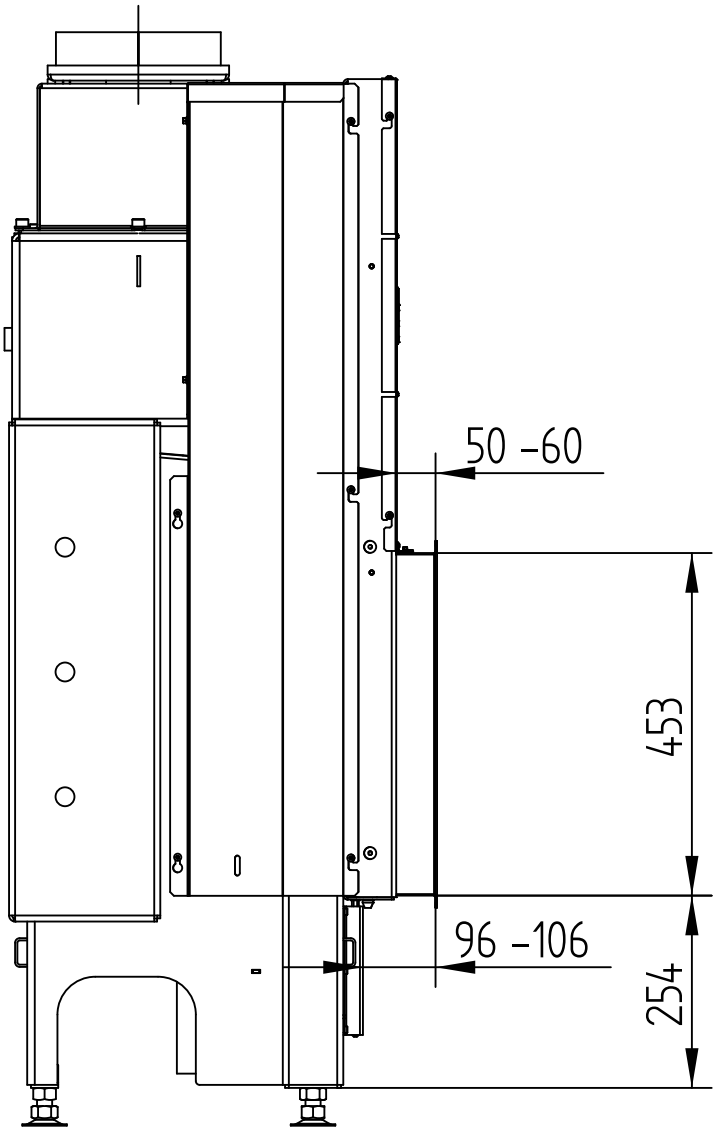

Hoxter gmbh I Hersbrucker Straße 23 I 912 44 Reichenschwand I Germany I info@hoxter.de I +49 (0)9151 8659 163
Hoxter a.s. I Mlynska 326/13 I 602 00 Brno I Czech Republic I info@hoxter.eu I +420 518 777 701

HAKA **89/45Wh, 89/45Wh+**

Technical data
Version **07/2015**

COVER FRAME 4-SIDED 1 x 90°, 50 mm

M 1 : 10

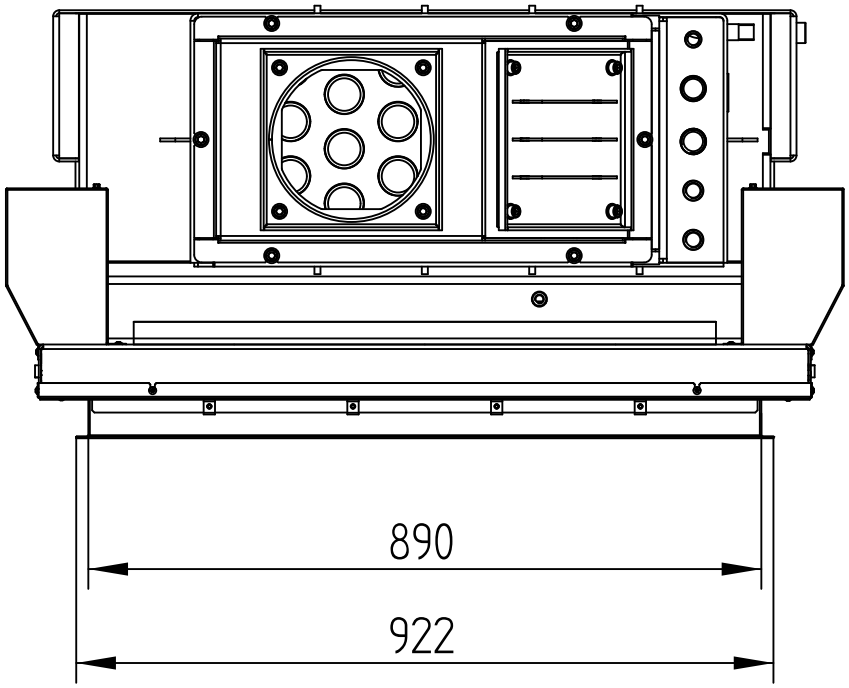

Hoxter gmbh I Hersbrucker Straße 23 I 912 44 Reichenschwand I Germany I info@hoxter.de I +49 (0)9151 8659 163
Hoxter a.s. I Mlynska 326/13 I 602 00 Brno I Czech Republic I info@hoxter.eu I +420 518 777 701

HAKA **89/45Wh, 89/45Wh+**

Technical data
Version **07/2015**

COVER FRAME 4-SIDED 1 x 90°, 80 mm

M 1 : 10

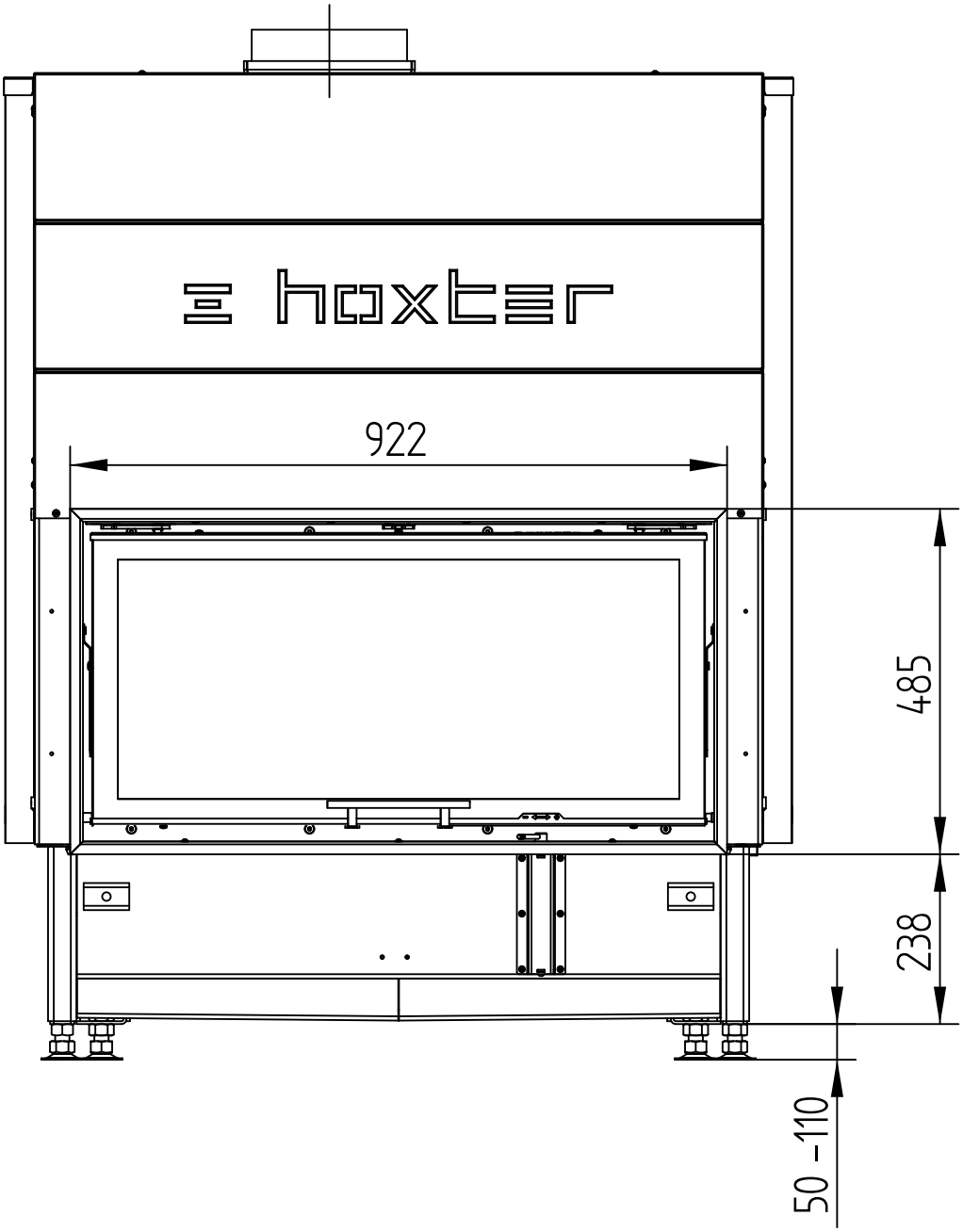

HAKA **89/45Wh, 89/45Wh+**

Technical data
Version **07/2015**

COVER FRAME 4-SIDED 1 x 90°, 80 mm

M 1 : 10

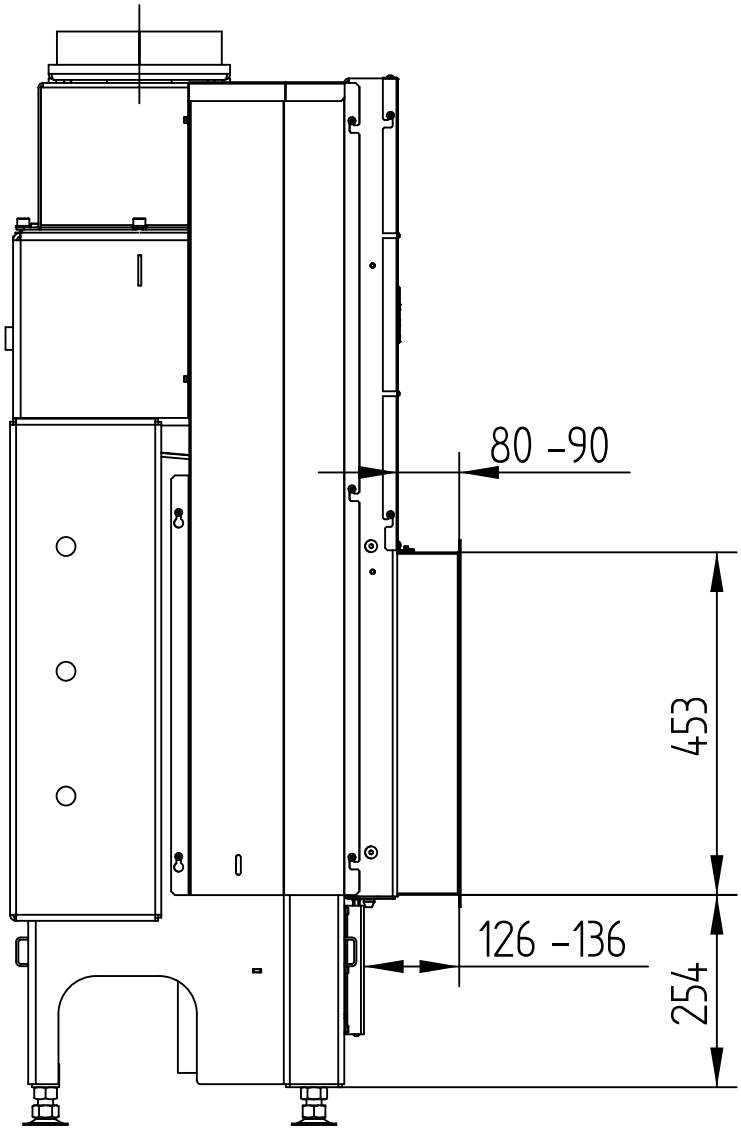

Hoxter gmbh I Hersbrucker Straße 23 I 912 44 Reichenschwand I Germany I info@hoxter.de I +49 (0)9151 8659 163
Hoxter a.s. I Mlynska 326/13 I 602 00 Brno I Czech Republic I info@hoxter.eu I +420 518 777 701

HAKA **89/45Wh, 89/45Wh+**

Technical data
Version **07/2015**

COVER FRAME 4-SIDED 1 x 90°, 80 mm

M 1 : 10

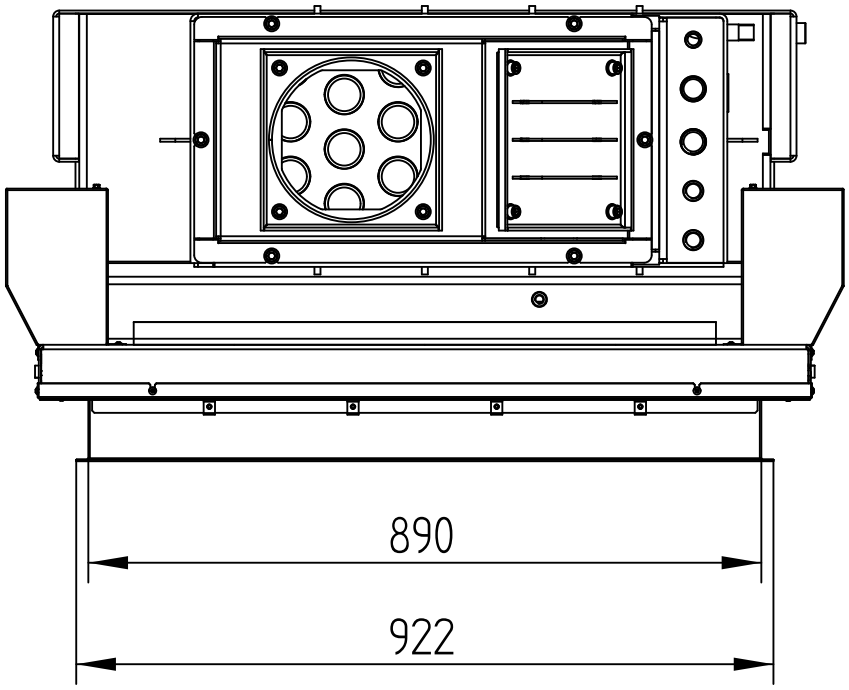

Hoxter gmbh I Hersbrucker Straße 23 I 912 44 Reichenschwand I Germany I info@hoxter.de I +49 (0)9151 8659 163
Hoxter a.s. I Mlynska 326/13 I 602 00 Brno I Czech Republic I info@hoxter.eu I +420 518 777 701

HAKA **89/45Wh, 89/45Wh+**

Technical data
Version **07/2015**

BUILD-ON FRAME 4-SIDED, 50 mm

M 1 : 10

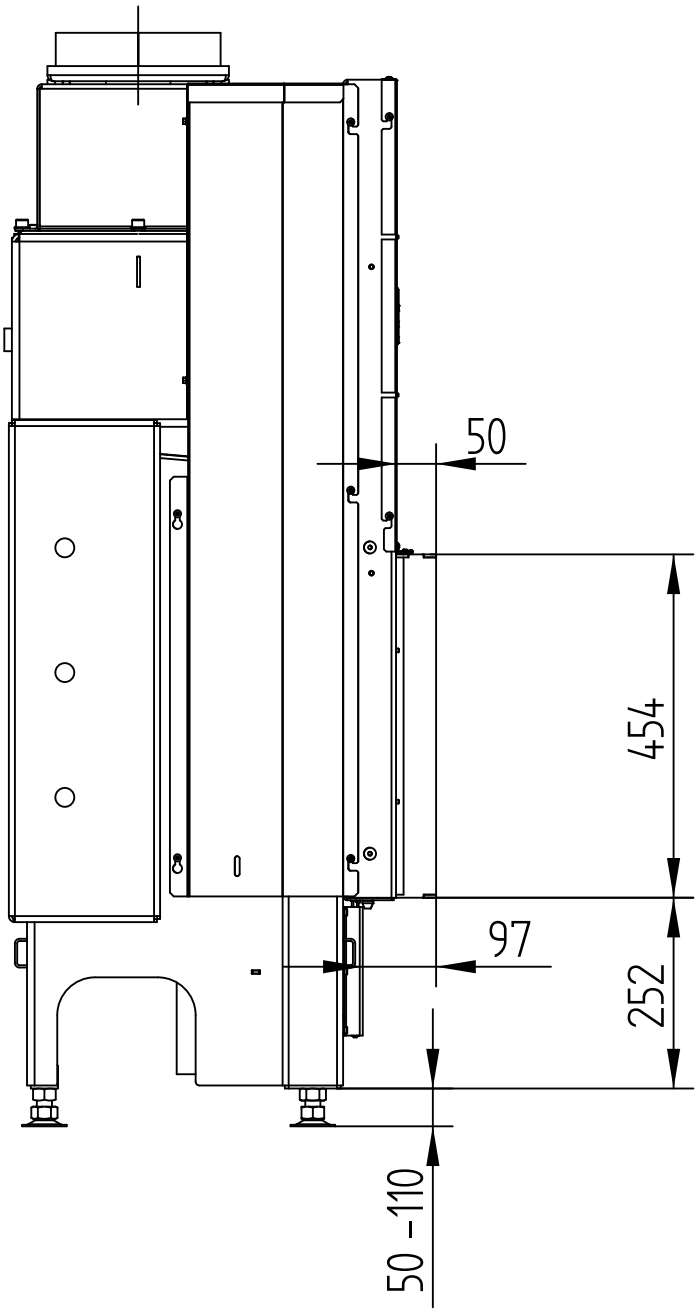

HAKA **89/45Wh, 89/45Wh+**

Technical data
Version **07/2015**

BUILD-ON FRAME 4-SIDED, 50 mm

M 1 : 10

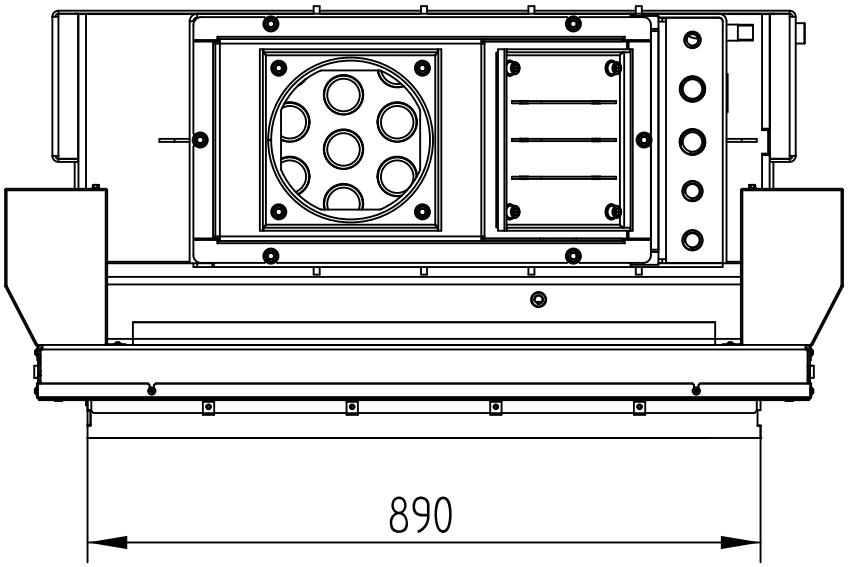

Hoxter gmbh I Hersbrucker Straße 23 I 912 44 Reichenschwand I Germany I info@hoxter.de I +49 (0)9151 8659 163
Hoxter a.s. I Mlynska 326/13 I 602 00 Brno I Czech Republic I info@hoxter.eu I +420 518 777 701

HAKA **89/45Wh, 89/45Wh+**

Technical data
Version **07/2015**

BUILD-ON FRAME 4-SIDED, 80 mm

M 1 : 10

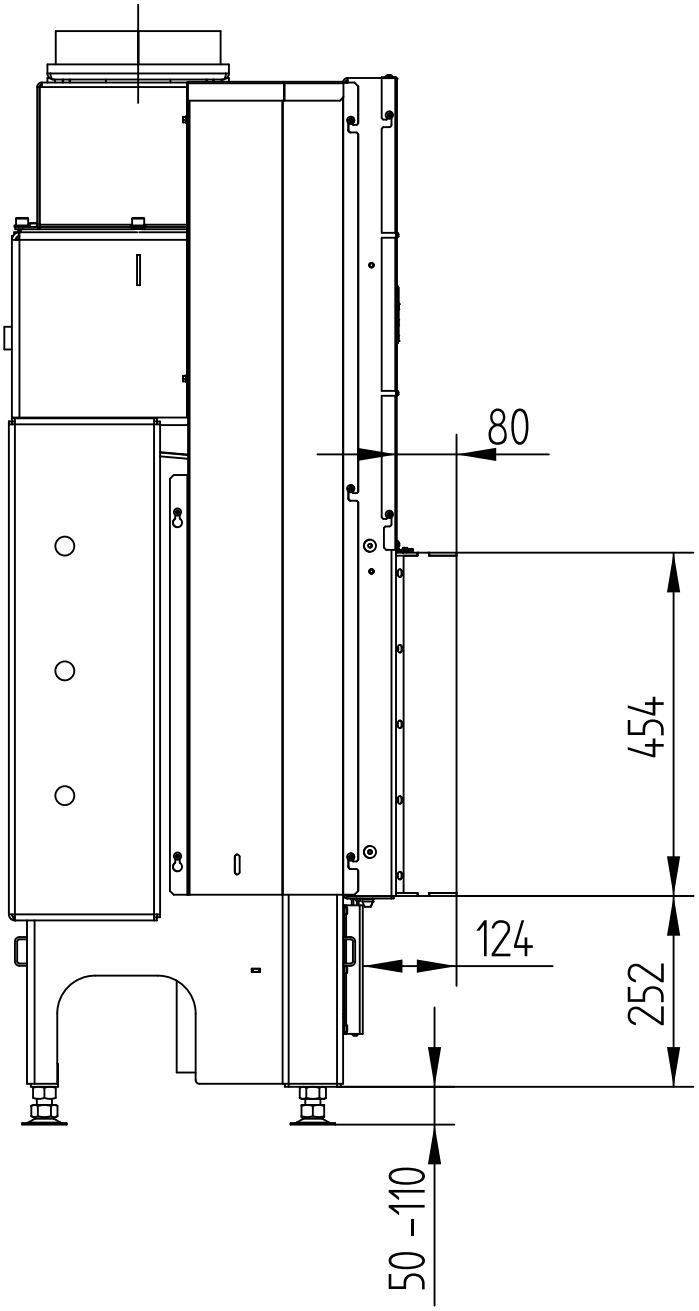

HAKA **89/45Wh, 89/45Wh+**

Technical data
Version **07/2015**

BUILD-ON FRAME 4-SIDED, 80 mm

M 1 : 10

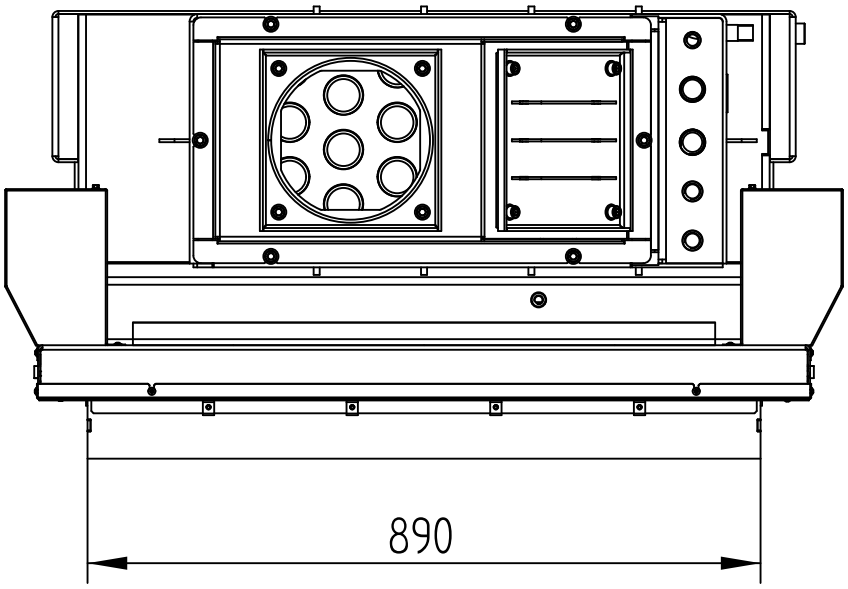

Hoxter gmbh I Hersbrucker Straße 23 I 912 44 Reichenschwand I Germany I info@hoxter.de I +49 (0)9151 8659 163
Hoxter a.s. I Mlynska 326/13 I 602 00 Brno I Czech Republic I info@hoxter.eu I +420 518 777 701